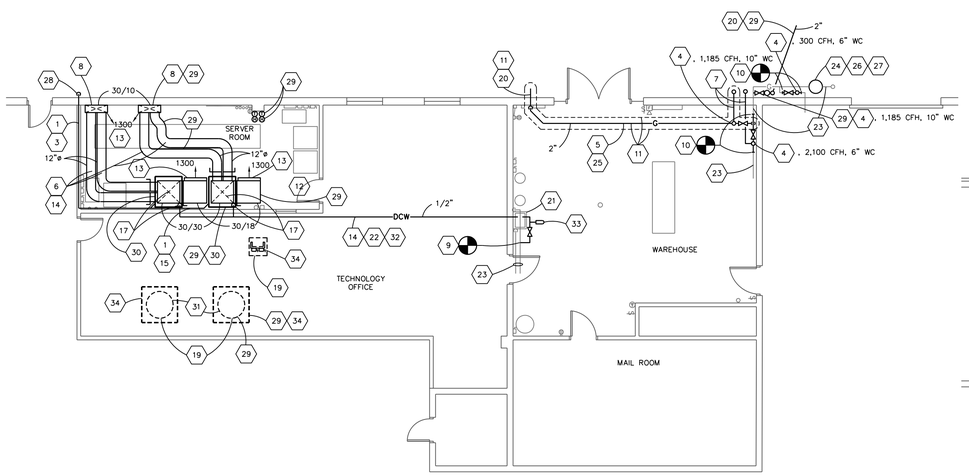

MECHANICAL PLAN

SCALE: 1/8" = 1'-0"

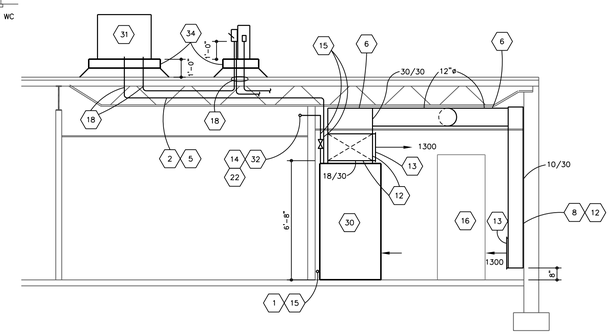

MECHANICAL SECTION

SCALE: 1/4" = 1'-0"

SEQUENCE OF OPERATIONS

1. LEAD COMPUTER ROOM AHU CONTROLS SHALL BE SET AS FOLLOWS:
   a. AHU FAN SHALL RUN CONTINUOUSLY.
   b. COOLING SYSTEM SHALL TURN ON IF ROOM TEMPERATURE EXCEEDS 70 DEGREES AND SHALL BE OFF IF ROOM TEMPERATURE IS BELOW 68 DEGREES.
   c. COOLING SYSTEM SHALL OPERATE AT FULL CAPACITY IN DEHUMIDIFICATION MODE IF ROOM HUMIDITY EXCEEDS 60 PERCENT. DEHUMIDIFICATION MODE SHALL NOT OPERATE IF ROOM HUMIDITY IS BELOW 55 PERCENT.
   d. REHEAT COIL SHALL TURN ON IF ROOM TEMPERATURE DROPS BELOW 66 DEGREES AND SHALL BE OFF IF ROOM TEMPERATURE IS ABOVE 68 DEGREES.
   e. HUMIDIFIER SHALL OPERATE IF ROOM HUMIDITY DROPS BELOW 40 PERCENT AND SHALL NOT OPERATE IF ROOM HUMIDITY IS ABOVE 45 PERCENT.
2. IF THE ALTERNATE FOR A SECOND COMPUTER ROOM AHU IS AWARDED, THE LAG COMPUTER ROOM AHU CONTROLS SHALL BE SET AS FOLLOWS.
   a. AHU FAN SHALL RUN ONLY IF COOLING, DEHUMIDIFICATION, HEATING, OR HUMIDIFICATION IS CALLED FOR UNDER ONE OF THE CONDITIONS BELOW.
   b. COOLING SYSTEM SHALL TURN ON IF ROOM TEMPERATURE EXCEEDS 73 DEGREES AND SHALL BE OFF IF ROOM TEMPERATURE IS BELOW 71 DEGREES.
   c. COOLING SYSTEM SHALL OPERATE AT FULL CAPACITY IN DEHUMIDIFICATION MODE IF ROOM HUMIDITY EXCEEDS 70 PERCENT. DEHUMIDIFICATION MODE SHALL NOT OPERATE IF ROOM HUMIDITY IS BELOW 65 PERCENT.
   d. REHEAT COIL SHALL TURN ON IF ROOM TEMPERATURE DROPS BELOW 64 DEGREES AND SHALL BE OFF IF ROOM TEMPERATURE IS ABOVE 66 DEGREES.
   e. HUMIDIFIER SHALL OPERATE IF ROOM HUMIDITY DROPS BELOW 30 PERCENT AND SHALL NOT OPERATE IF ROOM HUMIDITY IS ABOVE 35 PERCENT.
3. IF THE ALTERNATE FOR A SECOND COMPUTER ROOM AHU IS NOT AWARDED, THE SINGLE UNIT SHALL BE SET TO OPERATE AS INDICATED ABOVE FOR THE LEAD COMPUTER ROOM AHU.
4. LEAD AND LAG UNITS WILL BE ROTATED PERIODICALLY BY THE OWNER BY MANUALLY CHANGING THE TEMPERATURE AND HUMIDITY SETPOINTS OF THE THERMOSTATS AND HUMIDISTATS SERVING EACH UNIT AND BY SETTING THE LEAD AHU FAN TO CONTINUOUS OPERATION AND THE LAG UNIT FAN TO CYCLING OPERATION.
5. THE CONTROLS FURNISHED WITH THE EQUIPMENT SHALL PROVIDE FOR ALL OF THE CONTROL SETTINGS INDICATED ABOVE.
6. ALL SETPOINTS SHALL BE ADJUSTABLE.

SYMBOLS AND ABBREVIATIONS

A.H.U.	AIR HANDLING UNIT
C.D.	CONDENSATE DRAIN
CFM	CUBIC FEET PER MINUTE
H.V.A.C.	HEATING, VENTILATING & AIR CONDITIONING

- UNION
- CHECK VALVE
- PIPE ELBOW, TURNED UP
- PIPE ELBOW, TURNED DOWN
- UNION
- (H) HUMIDITY SENSOR, MOUNT 48 INCHES ABOVE FLOOR TO TOP
- (T) THERMOSTAT, MOUNT 48 INCHES ABOVE FLOOR TO TOP
- MANUAL DAMPER
- DUCT ELBOW TURNED UP (SUPPLY)
- DUCT ELBOW TURNED DOWN (SUPPLY)
- 12/10 DUCT (SIZE IN INCHES, 1st FIGURE SIDE SHOWN)
- ACCESS DOOR
- SUPPLY DUCT SECTION
- RETURN, EXHAUST OR O.A. DUCT SECTION
- SUPPLY REGISTER OR GRILLE
- EXHAUST OR RETURN AIR GRILLE OR REGISTER
- DCW COLD WATER PIPING
- G GAS PIPING
- CONNECTION POINT OF NEW TO EXISTING

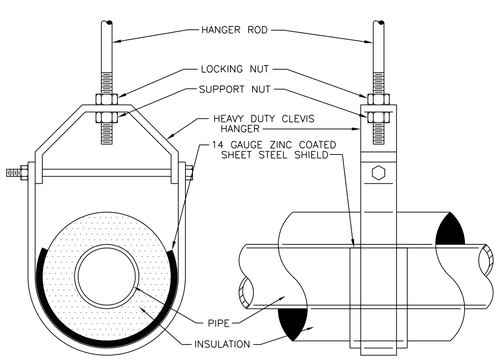

PIPE HANGERS

NO SCALE

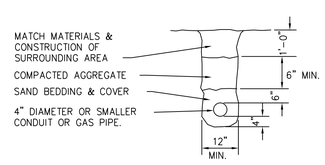

TYPICAL SMALL UTILITY TRENCH DETAIL

NO SCALE

MECHANICAL PLAN KEYNOTES

1. PROVIDE 1 INCH SCHEDULE 40 PVC DWV CONDENSATE DRAIN PIPING. PROVIDE TRAP AT CONNECTION TO EQUIPMENT CONFORMING TO EQUIPMENT MANUFACTURER'S RECOMMENDATIONS.
2. PROVIDE REFRIGERANT PIPING. INSTALL AND INSULATE AS RECOMMENDED BY THE MANUFACTURER OF THE CONNECTED EQUIPMENT.
3. INSTALL PIPING IN WALL. CUT AND PATCH.
4. PROVIDE GAS PRESSURE REGULATOR, 2 PSI INLET PRESSURE, OUTLET PRESSURE AND CAPACITY AS INDICATED. CONNECT VENT PORT OF INDOOR REGULATORS TO VENT PIPING ROUTED TO OUTSIDE.
5. INSTALL PIPING IN JOIST SPACE.
6. INSTALL DUCT TIGHT TO STRUCTURAL MEMBERS ABOVE. ALLOW 1-1/2 INCHES CLEARANCE FOR EXTERNALLY INSULATED DUCTS.
7. PROVIDE GAS VENT PIPING SIZED IN ACCORDANCE WITH THE REGULATOR MANUFACTURER'S RECOMMENDATIONS. TERMINATE WITH RAIN CAP AND SCREENED OPENINGS OUTSIDE OF BUILDING 2 FEET HIGHER THAN ADJACENT ROOF AT LOCATION INDICATED. PAINT EXTERIOR PIPING. OWNER TO SPECIFY COLOR.
8. INSTALL DUCT TIGHT AGAINST WALL.
9. CONNECT TO EXISTING COLD DOMESTIC WATER PIPING.
10. CONNECT TO EXISTING GAS PIPING. IN LINE PIPING SHALL BE SAME SIZE AS EXISTING LINE PIPING.
11. PROVIDE THIS WORK ONLY UNDER THE BASE BID. DELETE THIS WORK AND DELETE THE COST OF THIS WORK FROM THE BID FOR THE REMOTE GENERATOR LOCATION ALTERNATE.
12. ALL EXPOSED DUCTWORK IN THIS ROOM SHALL HAVE DUCT LINER. DIMENSIONS INDICATED FOR DUCTWORK ARE TO OUTSIDE OF METAL. DO NOT INCREASE DUCT SIZE TO ALLOW FOR LINER THICKNESS.
13. PROVIDE OCCUPANT ADJUSTABLE DAMPER IN REGISTER.
14. ABOVE CEILING.
15. EXPOSED, AGAINST WALL.
16. EXISTING RACK CABINETS FOR ELECTRONIC EQUIPMENT.
17. UP TO CEILING PENETRATION.
18. UP TO PENETRATION OF DECK ABOVE.
19. LOCATION OF ROOFTOP EQUIPMENT.
20. REFER TO ELECTRICAL DRAWINGS FOR CONTINUATION OF GAS PIPING.
21. EXISTING PLUMBING FIXTURE TO REMAIN.
22. PROVIDE NEW WATER PIPING.
23. EXISTING PIPING.
24. GAS METER AND REGULATOR TO BE UPGRADED.
25. EXPOSED, OVERHEAD.
26. BY UTILITY COMPANY.
27. COORDINATE THIS WORK WITH UTILITY COMPANY.
28. DRAIN PIPING SHALL PENETRATE EXTERIOR WALL AND TERMINATE WITH A 90 DEGREE ELBOW TURNED DOWN.
29. REFER TO ALTERNATES.
30. PROVIDE NOMINAL 5-TON COMPUTER ROOM AIR HANDLING UNIT WITH R-410A EVAPORATOR COIL, 2500 CFM MINIMUM AT 0.5 INCHES EXTERNAL STATIC PRESSURE, 49.5 MBH MINIMUM SENSIBLE CAPACITY AND 54 MBH MINIMUM TOTAL CAPACITY AT 70 DEGREES DRY BULB AND 58.5 DEGREES WET BULB. PROVIDE MINIMUM 10 POUNDS PER HOUR HUMIDIFIER AND 9 KW MINIMUM ELECTRIC REHEAT COIL. PROVIDE CONTROLS TO MAINTAIN ROOM TEMPERATURE AT 70 DEGREES PLUS OR MINUS 1 DEGREE AND 55 PERCENT RELATIVE HUMIDITY PLUS OR MINUS 5 PERCENT. SETPOINTS SHALL BE ADJUSTABLE TO ALLOW SECOND UNIT TO OPERATE IN LEAD-LAG AND STANDBY OPERATION BY SETTING ITS SETPOINT 3 DEGREES HIGHER THAN THE LEAD UNIT. POWER REQUIREMENTS ARE 208 VOLT, 3 PHASE, 56.7 MCA AND 60 AMP MOCP. DIMENSIONS SHALL NO EXCEED 40 INCHES WIDE, 42 INCHES DEEP, AND 78 INCHES TALL.
31. PROVIDE CONDENSING UNIT MATCHED TO AND TESTED WITH THE COMPUTER ROOM AIR HANDLING UNIT TO PROVIDE THE CAPACITIES INDICATED AT 95 DEGREES AMBIENT TEMPERATURE. 208 VOLTS, 3 PHASE, 33 MCA AND 45 MOCP.
32. PROVIDE HORIZONTAL OR VERTICAL OFFSETS AS REQUIRED TO ROUTE PIPING OVER, UNDER, OR AROUND OBSTRUCTIONS. PROVIDE MANUAL DRAINS AT ALL LOW POINTS.
33. PROVIDE SIZE "A" WATER HAMMER ARRESTOR.
34. PROVIDE ROOF CURB AND 3 X 3 X 1/4 INCH ANGLE FRAMING ASSEMBLY BENEATH ROOF TO PROVIDE CONTINUOUS SUPPORT FROM BELOW FOR THE ROOF CURB. CLAMP ANGLE FRAMING SYSTEM TO THE EXISTING ROOF JOIST TOP CHORDS. PROVIDE CURB CANTS AND FLASHING, ALL INSTALLED IN ACCORDANCE WITH THE EXISTING ROOFING MANUFACTURER'S RECOMMENDATIONS IN A MANNER THAT WILL MAINTAIN THE ALL EXISTING ROOF WARRANTIES. IT SHALL BE THE CONTRACTOR'S RESPONSIBILITY TO OBTAIN THE EXISTING ROOFING MANUFACTURER'S WRITTEN RECOMMENDATIONS AND SUBMIT THEM FOR APPROVAL PRIOR TO BEGINNING ANY ROOF CUTTING AND PATCHING WORK. CURB CONSTRUCTION SHALL BE COORDINATED WITH SUPPORT REQUIREMENTS OF THE CONDENSING UNIT MANUFACTURER.

DON R. MILLER ENGINEERING
ENGINEERING SERVICES
2529 NEW MADISON-COLETOWN ROAD
NEW MADISON, OHIO 45346
TELEPHONE (937) 621-9323
EMAIL: DON@DONRMILLERPE.COM

DON R. MILLER REGISTERED NO. PE60860109 STATE OF INDIANA PROFESSIONAL ENGINEER

SERVER SUPPORT SYSTEMS IMPROVEMENTS
ADMINISTRATION BUILDING
RICHMOND COMMUNITY SCHOOLS
300 HUB ETCHISON PARKWAY
RICHMOND, INDIANA 47374

MECHANICAL PLAN

PROJECT NO.	E17013
DESIGNED BY	D.R.M.
DRAWN BY	D.A.L.
CHECKED BY	D.R.M.
DATE	10/05/2017
FILE NO.	
REVISIONS	

DRAWING OF M101